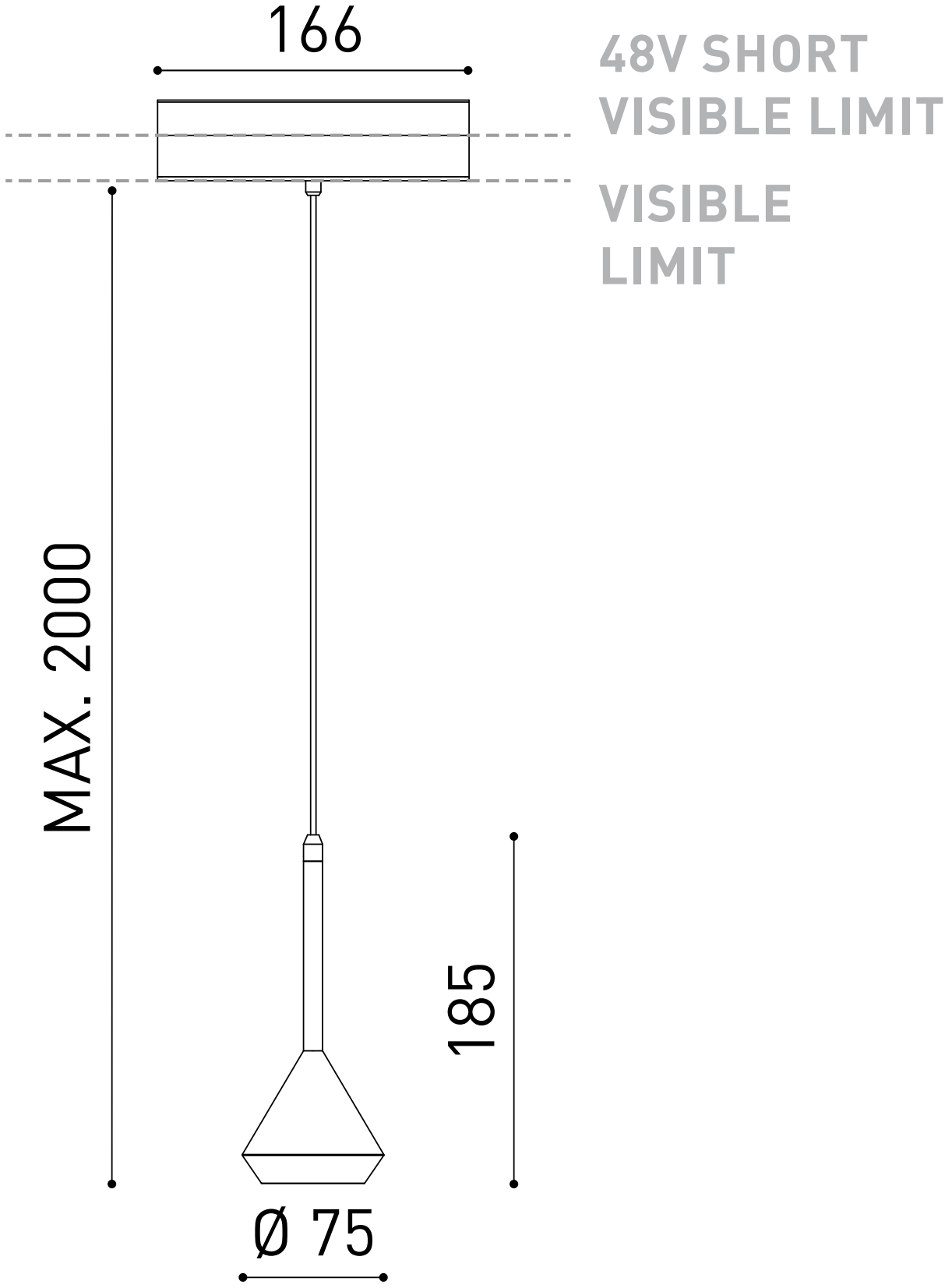
166
48V SHORT
VISIBLE LIMIT
VISIBLE
LIMIT
MAX. 2000
185
Ø 75